NORTH FAYETTE TOWNSHIP

COMMUNITY DEVELOPMENT DEPARTMENT

QUICK GUIDE FOR A RESIDENTIAL DECK PERMIT

IMPORTANT DECK DETAILS

- **Please pay very close attention to this Deck Guide. There are many changes to deck construction and new charts and figures as adopted by the 2015 International Residential Code under the PA UCC that is now in effect. All Deck permits issued after January 1, 2016 must follow all requirements of Section R507 of the 2015 International Residential Code.**

- Screws are not permitted to be used in any type of metal connectors (i.e. joist hangers, beam to post connectors) unless they are an approved structural screw. Use joist hanger nails, minimum 10D nails or nails approved by manufacturer for product being used.

- Fasteners used with treated wood must be galvanized or stainless steel.

- Decks may not be attached to manufactured dwellings in any way.

- Deck ledger boards cannot be attached to or through stone or masonry veneer (with an air space behind) and cannot be attached to cantilevered floor joist of the existing structure. Please ask the building code official for details if attaching to concrete or a block wall.

- Footings do not need to extend to the frost line depth of 36" if solid rock is encountered. Footings for free-standing decks not attached to the home by any means only need to extend a minimum of 12-inches in depth.

- Decks constructed around a swimming pool will also need to meet all safety barrier requirements as set forth in the New Swimming Pool Guide.

- If a hot tub or similar item will be placed on a deck, a registered design professional (i.e. Architect or Engineer) will need to sign and stamp the plans.

- If framing around a bump out (such as for a chimney, bay window or similar), please follow the detail at the end of this packet for proper framing methods.

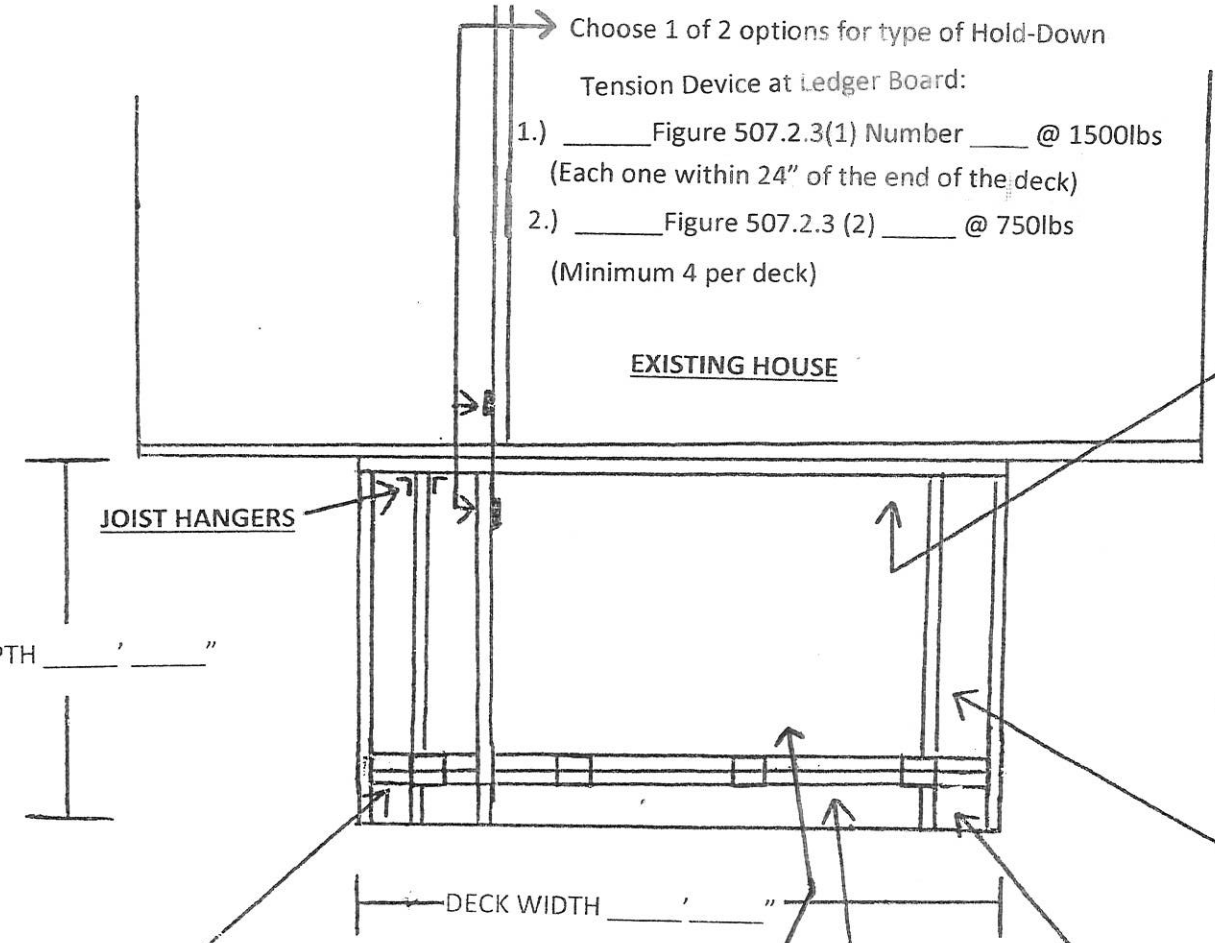

Choose 1 of 2 options for type of Hold-Down Tension Device at Ledger Board:

1.) _____Figure 507.2.3(1) Number ____ @ 1500lbs
(Each one within 24" of the end of the deck)

2.) _____Figure 507.2.3 (2) _____ @ 750lbs
(Minimum 4 per deck)

FLASHING TYPE _____

LEDGER BOARD (2"X8" minimum)

Size _2_X_____"

Attached to house with

_____"X_____" bolts/lags at _____o.c.

(2" minimum from the top and bottom.)

(See tables 507.2 & 507.2.1)

Or _____" Ledger Locks at _____" o.c. staggered

FLOOR JOIST

_2_X____ at ____" o.c.

See Table 507.5

BEAM CANTILEVER

____' ____"

(Maximum ¼ of the beam span between supports.)

BEAM

Double ____X_____

Max Span ____'_____"

(See Table 507.6)

FLOOR JOIST CANTILEVER

____' _____"

(Maximum ¼ of joist span)

Choose 1 of 2 options for lateral restraint at floor joist.

1.) Blocking: ___"X___" (Min. 60% of joist depth)
2.) Rim Joist: Min. 3_____nails (Min. 10D) or Min 3_____screws (Min. 3" long wood screws)

THIS DRAWING IS NOT TO SCALE.

STAIRS

Width _____"

No. of stringers _____

Space between risers _____" (Maximum 4" when greater than 30" above grade)

Tread depth _____" (Minimum 9")

Riser height _____" (Maximum 8 ¼")

Number of risers _____

(if more than 4 risers a graspable handrail is needed.)

Type of handrail (if needed) _____

Height of handrail _____" above tread nosing.

(Handrail must return at top and bottom.)

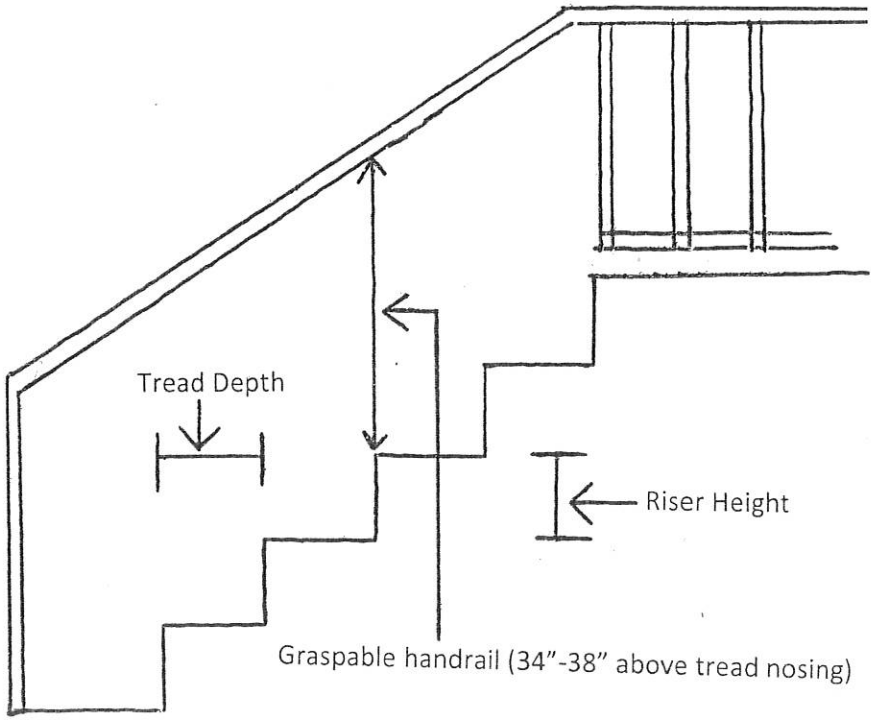

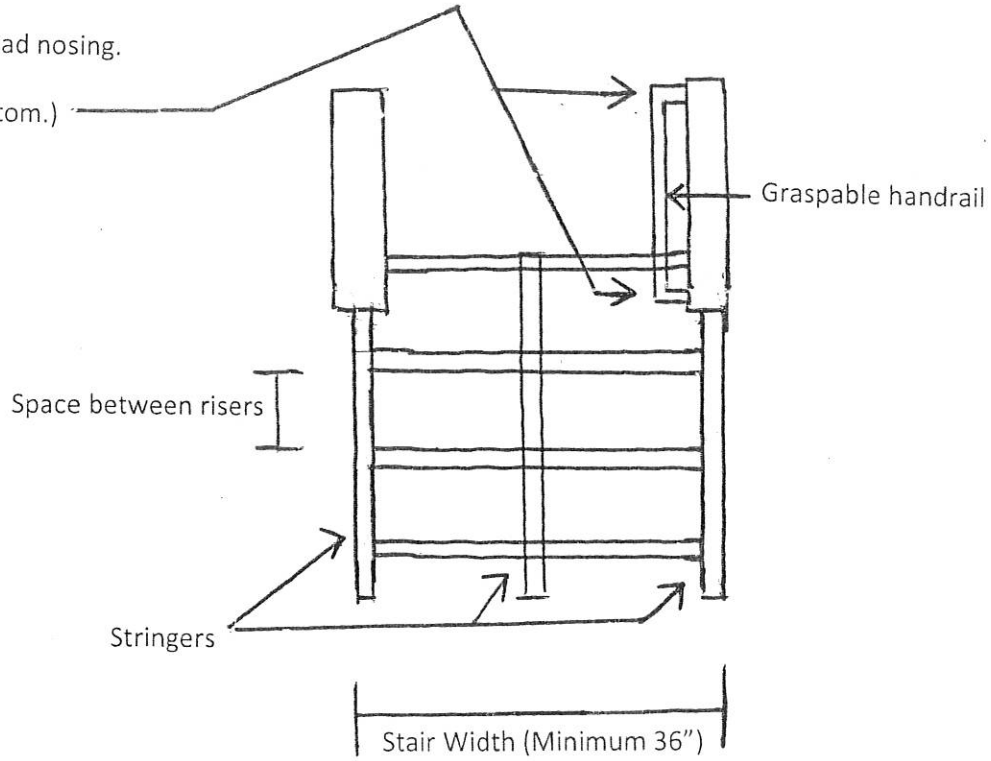

Illustration purposes only

Not a design

POST TO BEAM CONNECTION

Circle option you are installing.

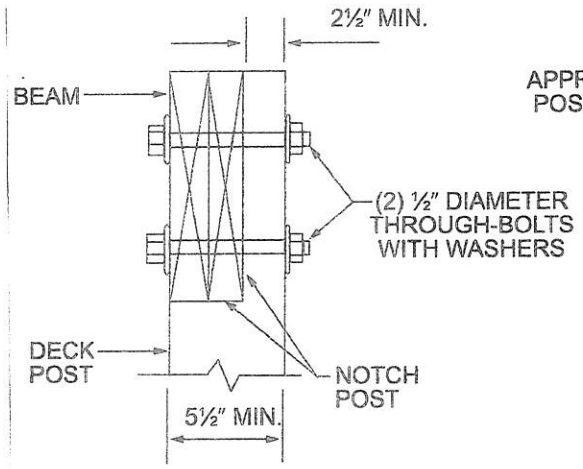

NOTCHED POST

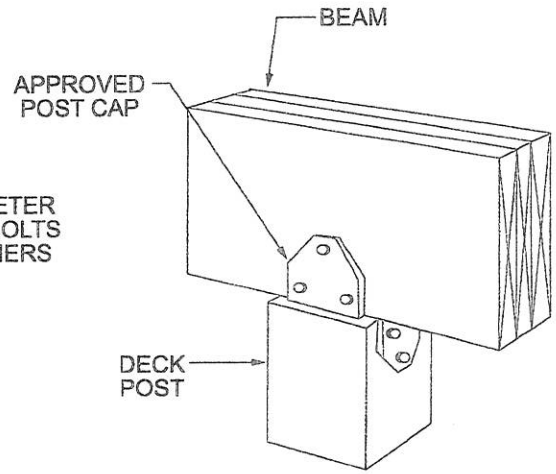

POST CAP

For bolts – washer under the head and nut

Beams must be fastened with 2 rows 10D nails minimum 16" o.c. along each edge.

Beam splits shall be over a post.

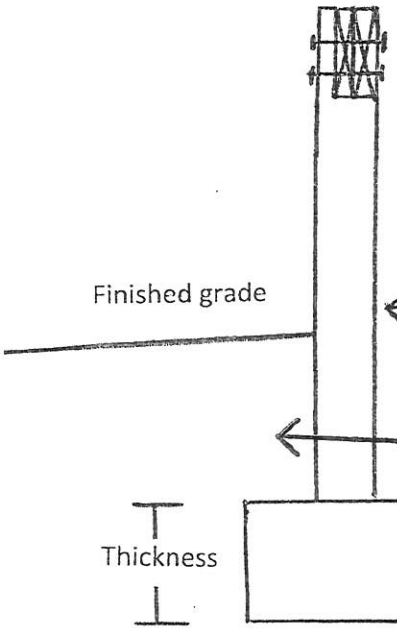

POST SIZE ____"X_____"

For minimum post sizing see Table 507.8

12" minimum embedment or post-base anchors.

FOOTER

Round _____" diameter or

Square _____"X_____"

Thickness under post_____"

Depth_____ (Minimum 3' or 1' if free-standing)

GUARDRAILS

Height _____" (Minimum 36")

Picket Spacing _____" (Maximum 4" openings)

Post Spacing _____' (Typically 6'-8' – Must hold 200lb load)

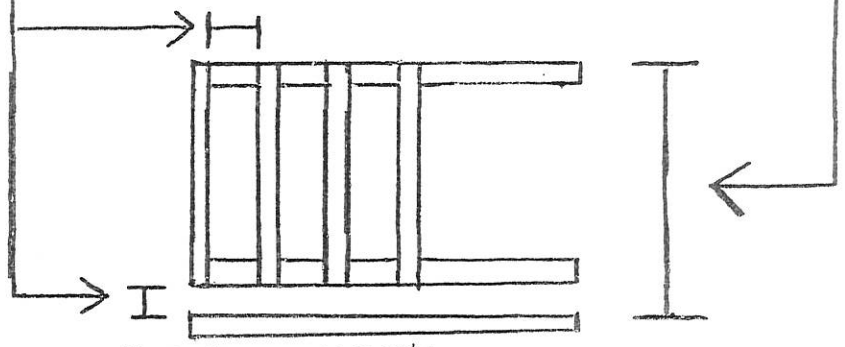

Illustration purposes only

Not a design

CHARTS AND FIGURES

TABLE R507.6
DECK BEAM SPAN LENGTHS[a, b] (ft. - in.)

SPECIES[c]	SIZE[d]	DECK JOIST SPAN LESS THAN OR EQUAL TO: (feet)						
		6	8	10	12	14	16	18
Southern pine	2 – 2 × 6	6-11	5-11	5-4	4-10	4-6	4-3	4-0
	2 – 2 × 8	8-9	7-7	6-9	6-2	5-9	5-4	5-0
	2 – 2 × 10	10-4	9-0	8-0	7-4	6-9	6-4	6-0
	2 – 2 × 12	12-2	10-7	9-5	8-7	8-0	7-6	7-0
	3 – 2 × 6	8-2	7-5	6-8	6-1	5-8	5-3	5-0
	3 – 2 × 8	10-10	9-6	8-6	7-9	7-2	6-8	6-4
	3 – 2 × 10	13-0	11-3	10-0	9-2	8-6	7-11	7-6
	3 – 2 × 12	15-3	13-3	11-10	10-9	10-0	9-4	8-10
Douglas fir-larch[e], hem-fir[e], spruce-pine-fir[e], redwood, western cedars, ponderosa pine[f], red pine[f]	3 × 6 or 2 – 2 x 6	5-5	4-8	4-2	3-10	3-6	3-1	2-9
	3 × 8 or 2 – 2 × 8	6-10	5-11	5-4	4-10	4-6	4-1	3-8
	3 × 10 or 2 – 2 × 10	8-4	7-3	6-6	5-11	5-6	5-1	4-8
	3 × 12 or 2 – 2 × 12	9-8	8-5	7-6	6-10	6-4	5-11	5-7
	4 × 6	6-5	5-6	4-11	4-6	4-2	3-11	3-8
	4 × 8	8-5	7-3	6-6	5-11	5-6	5-2	4-10
	4 × 10	9-11	8-7	7-8	7-0	6-6	6-1	5-8
	4 × 12	11-5	9-11	8-10	8-1	7-6	7-0	6-7
	3 – 2 × 6	7-4	6-8	6-0	5-6	5-1	4-9	4-6
	3 – 2 × 8	9-8	8-6	7-7	6-11	6-5	6-0	5-8
	3 – 2 × 10	12-0	10-5	9-4	8-6	7-10	7-4	6-11
	3 – 2 × 12	13-11	12-1	10-9	9-10	9-1	8-6	8-1

For SI: 1 inch = 25.4 mm, 1 foot = 304.8 mm, 1 pound per square foot = 0.0479 kPa, 1 pound = 0.454 kg.

a. Ground snow load, live load = 40 psf, dead load = 10 psf, L/Δ = 360 at main span, L/Δ = 180 at cantilever with a 220-pound point load applied at the end.

b. Beams supporting deck joists from one side only.

c. No. 2 grade, wet service factor.

d. Beam depth shall be greater than or equal to depth of joists with a flush beam condition.

e. Includes incising factor.

f. Northern species. Incising factor not included.

TABLE R507.5
DECK JOIST SPANS FOR COMMON LUMBER SPECIES[f] (ft. - in.)

SPECIES[a]	SIZE	SPACING OF DECK JOISTS WITH NO CANTILEVER[b] (inches)			SPACING OF DECK JOISTS WITH CANTILEVERS[c] (inches)		
		12	16	24	12	16	24
Southern pine	2 × 6	9-11	9-0	7-7	6-8	6-8	6-8
	2 × 8	13-1	11-10	9-8	10-1	10-1	9-8
	2 × 10	16-2	14-0	11-5	14-6	14-0	11-5
	2 × 12	18-0	16-6	13-6	18-0	16-6	13-6
Douglas fir-larch[d], hem-fir[d] spruce-pine-fir[d]	2 × 6	9-6	8-8	7-2	6-3	6-3	6-3
	2 × 8	12-6	11-1	9-1	9-5	9-5	9-1
	2 × 10	15-8	13-7	11-1	13-7	13-7	11-1
	2 × 12	18-0	15-9	12-10	18-0	15-9	12-10
Redwood, western cedars, ponderosa pine[e], red pine[e]	2 × 6	8-10	8-0	7-0	5-7	5-7	5-7
	2 × 8	11-8	10-7	8-8	8-6	8-6	8-6
	2 × 10	14-11	13-0	10-7	12-3	12-3	10-7
	2 × 12	17-5	15-1	12-4	16-5	15-1	12-4

For SI: 1 inch = 25.4 mm, 1 foot = 304.8 mm, 1 pound per square foot = 0.0479 kPa, 1 pound = 0.454 kg.

a. No. 2 grade with wet service factor.

b. Ground snow load, live load = 40 psf, dead load = 10 psf, L/Δ = 360.

c. Ground snow load, live load = 40 psf, dead load = 10 psf, L/Δ = 360 at main span, L/Δ = 180 at cantilever with a 220-pound point load applied to end.

d. Includes incising factor.

e. Northern species with no incising factor

f. Cantilevered spans not exceeding the nominal depth of the joist are permitted.

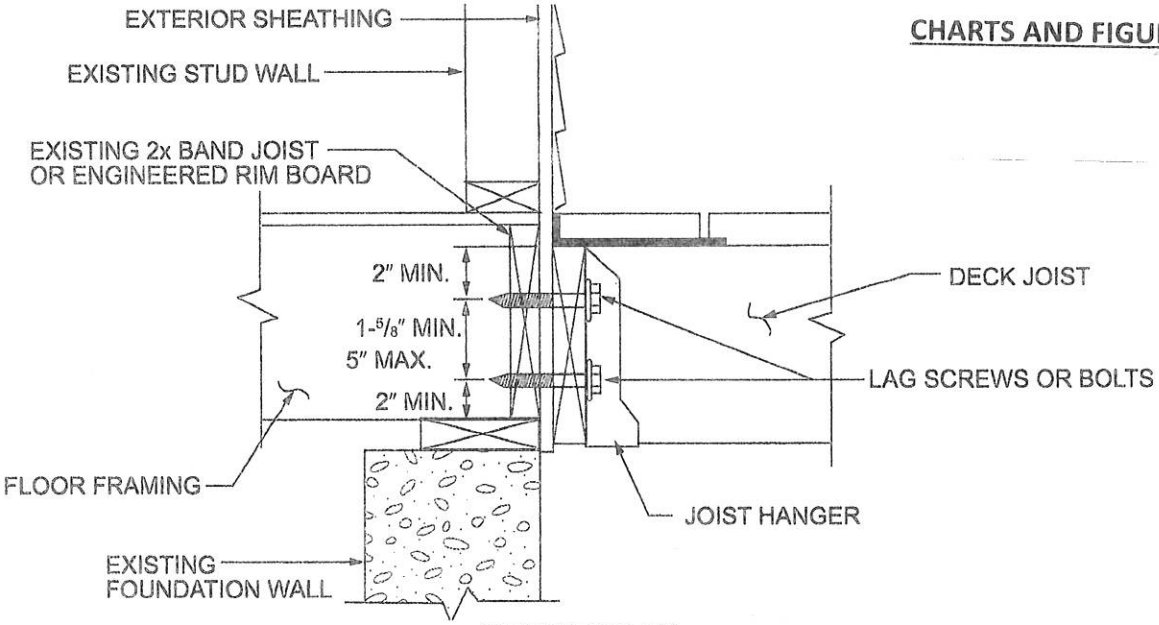

FIGURE R507.2.1(2)
PLACEMENT OF LAG SCREWS AND BOLTS IN BAND JOISTS

TABLE R507.2
DECK LEDGER CONNECTION TO BAND JOIST[a, b]
(Deck live load = 40 psf, deck dead load = 10 psf, snow load ≤ 40 psf)

CONNECTION DETAILS	JOIST SPAN						
	6′ and less	6′1″ to 8′	8′1″ to 10′	10′1″ to 12′	12′1″ to 14′	14′1″ to 16′	16′1″ to 18′
	On-center spacing of fasteners						
1/2-inch diameter lag screw with 1/2-inch maximum sheathing[c, d]	30	23	18	15	13	11	10
1/2-inch diameter bolt with 1/2-inch maximum sheathing[d]	36	36	34	29	24	21	19
1/2-inch diameter bolt with 1-inch maximum sheathing[e]	36	36	29	24	21	18	16

For SI: 1 inch = 25.4 mm, 1 foot = 304.8 mm, 1 pound per square foot = 0.0479 kPa.

a. Ledgers shall be flashed in accordance with Section R703.8 to prevent water from contacting the house band joist.

b. Snow load shall not be assumed to act concurrently with live load.

c. The tip of the lag screw shall fully extend beyond the inside face of the band joist.

d. Sheathing shall be wood structural panel or solid sawn lumber.

e. Sheathing shall be permitted to be wood structural panel, gypsum board, fiberboard, lumber or foam sheathing. Up to 1/2-inch thickness of stacked washers shall be permitted to substitute for up to 1/2 inch of allowable sheathing thickness where combined with wood structural panel or lumber sheathing.

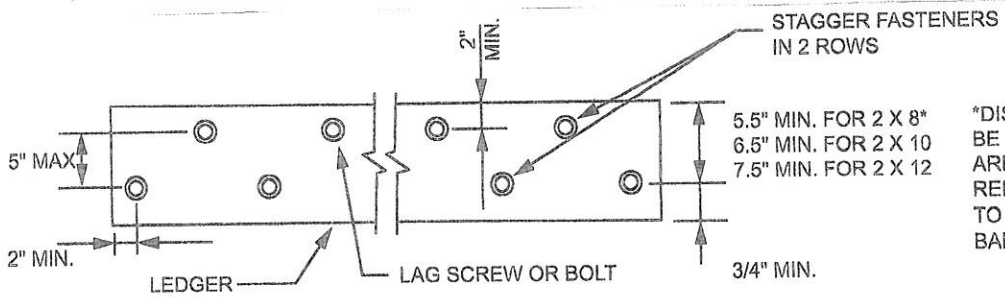

*DISTANCE SHALL BE PERMITTED TO BE REDUCED TO 4.5" IF LAG SCREWS ARE USED OR BOLT SPACING IS REDUCED TO THAT OF LAG SCREWS TO ATTACH 2 X 8 LEDGERS TO 2 X 8 BAND JOISTS.

FIGURE R507.2.1(1)
PLACEMENT OF LAG SCREWS AND BOLTS IN LEDGERS

TABLE 507.2.1
PLACEMENT OF LAG SCREWS AND BOLTS IN DECK LEDGERS AND BAND JOISTS

MINIMUM END AND EDGE DISTANCES AND SPACING BETWEEN ROWS				
	TOP EDGE	BOTTOM EDGE	ENDS	ROW SPACING
Ledger[a]	2 inches[d]	3/4 inch	2 inches[b]	1 5/8 inches[b]
Band Joist[c]	3/4 inch	2 inches	2 inches[b]	1 5/8 inches[b]

For SI: 1 inch = 25.4 mm.

a. Lag screws or bolts shall be staggered from the top to the bottom along the horizontal run of the deck ledger in accordance with Figure R507.2.1(1).

b. Maximum 5 inches.

c. For engineered rim joists, the manufacturer's recommendations shall govern.

d. The minimum distance from bottom row of lag screws or bolts to the top edge of the ledger shall be in accordance with Figure R507.2.1(1).

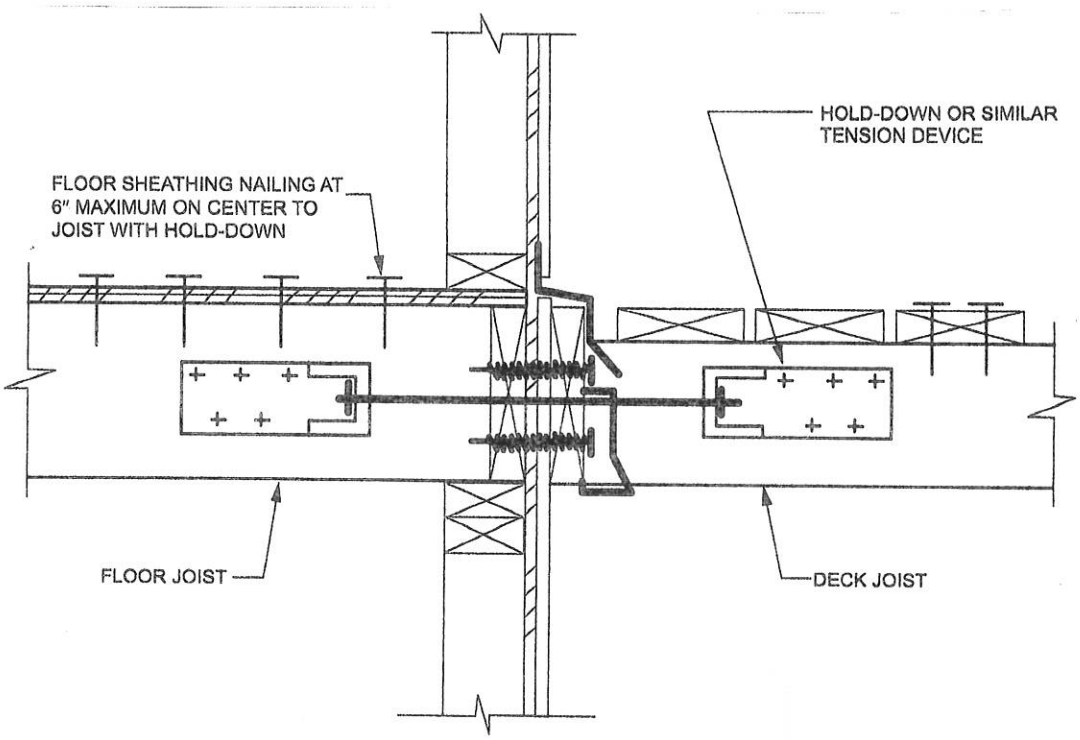

FIGURE 507.2.3(1)
DECK ATTACHMENT FOR LATERAL LOADS

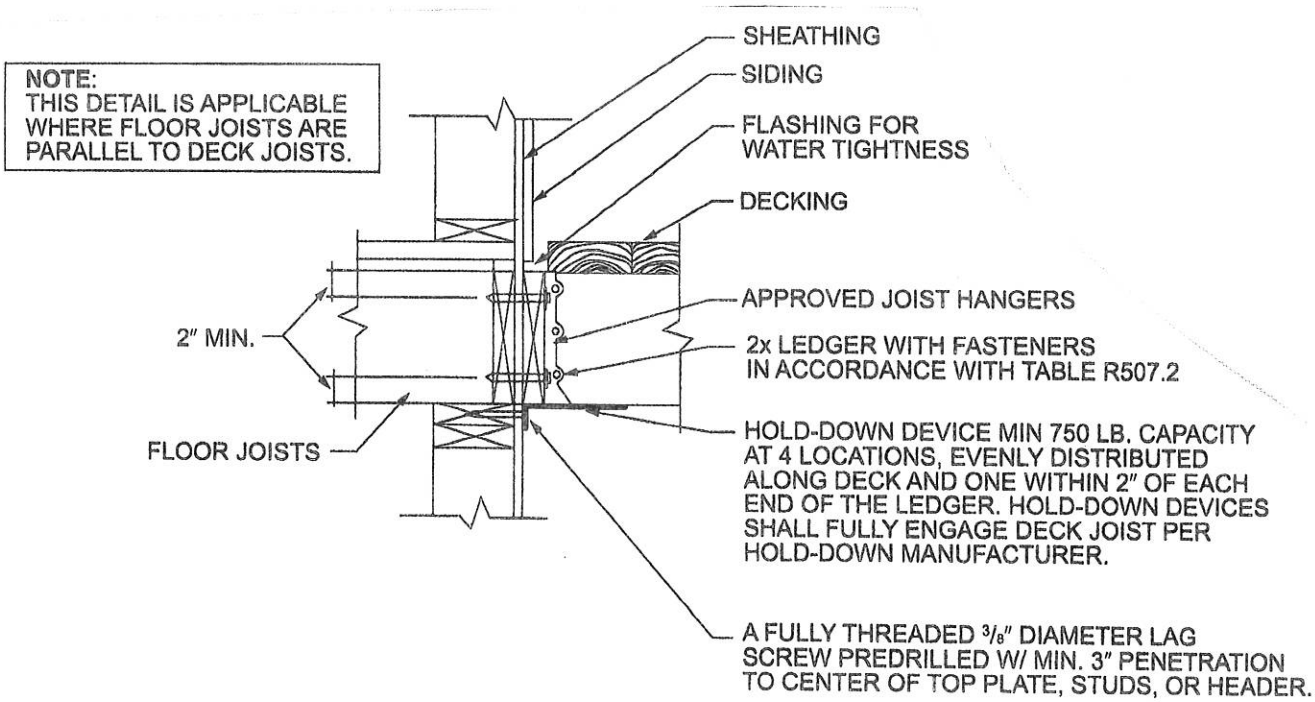

FIGURE R507.2.3(2)
DECK ATTACHMENT FOR LATERAL LOADS

CHARTS AND FIGURES

TABLE R507.4
MAXIMUM JOIST SPACING

MATERIAL TYPE AND NOMINAL SIZE	MAXIMUM ON-CENTER JOIST SPACING	
	Perpendicular to joist	Diagonal to joist[a]
$1^1/_4$-inch-thick wood	16 inches	12 inches
2-inch-thick wood	24 inches	16 inches
Plastic composite	In accordance with Section R507.3	In accordance with Section R507.3

For SI: 1 inch = 25.4 mm, 1 foot = 304.8 mm, 1 degree = 0.01745 rad.

a. Maximum angle of 45 degrees from perpendicular for wood deck boards

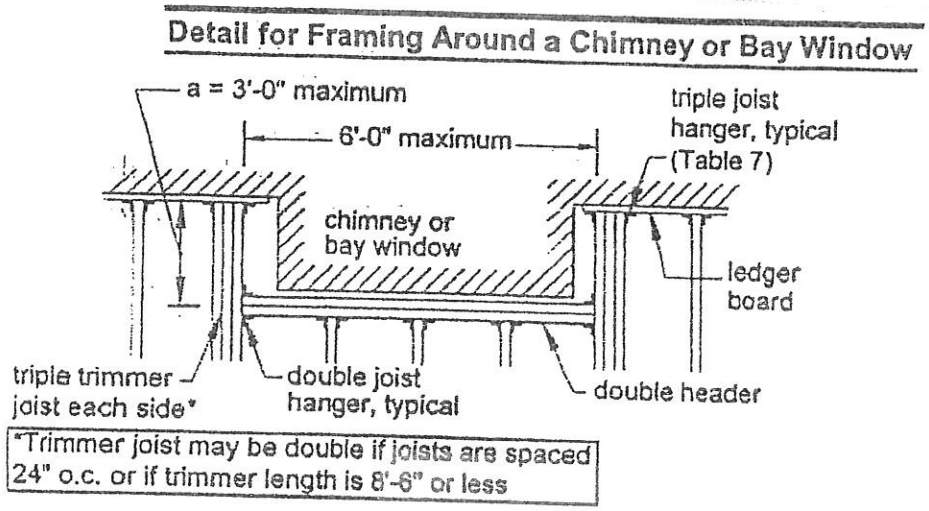

FIGURE R507.7.1
DECK BEAM TO DECK POST

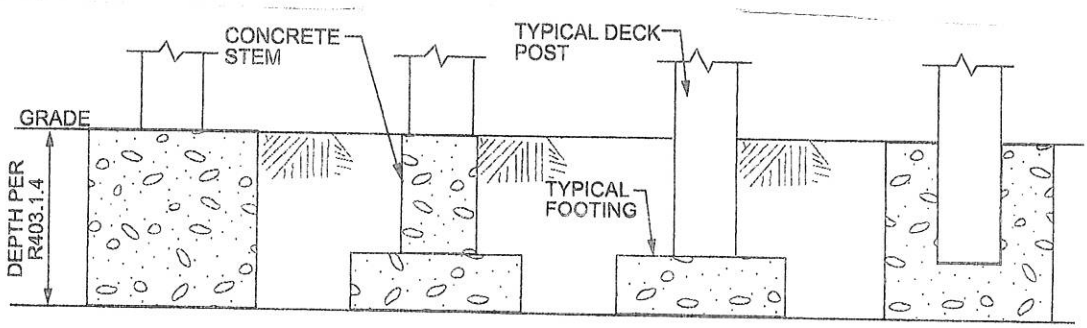

FIGURE R507.8.1
TYPICAL DECK POSTS TO DECK FOOTINGS

TABLE R507.8
DECK POST HEIGHT[a]

DECK POST SIZE	MAXIMUM HEIGHT[a]
4 × 4	8'
4 × 6	8'
6 × 6	14'

For SI: 1 foot = 304.8 mm.

a. Measured to the underside of the beam.